| REV. | DESCRIPTION | DATE | BY |
|---|---|---|---|
| 5 | Drawing updated. The I - connection 1/4" NPT-hole moved upward 0,5mm = .02" (dim 53mm was 52,5mm) and few missing dimensions added. | 2016-04-21 | LN |

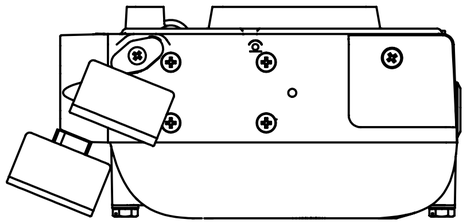

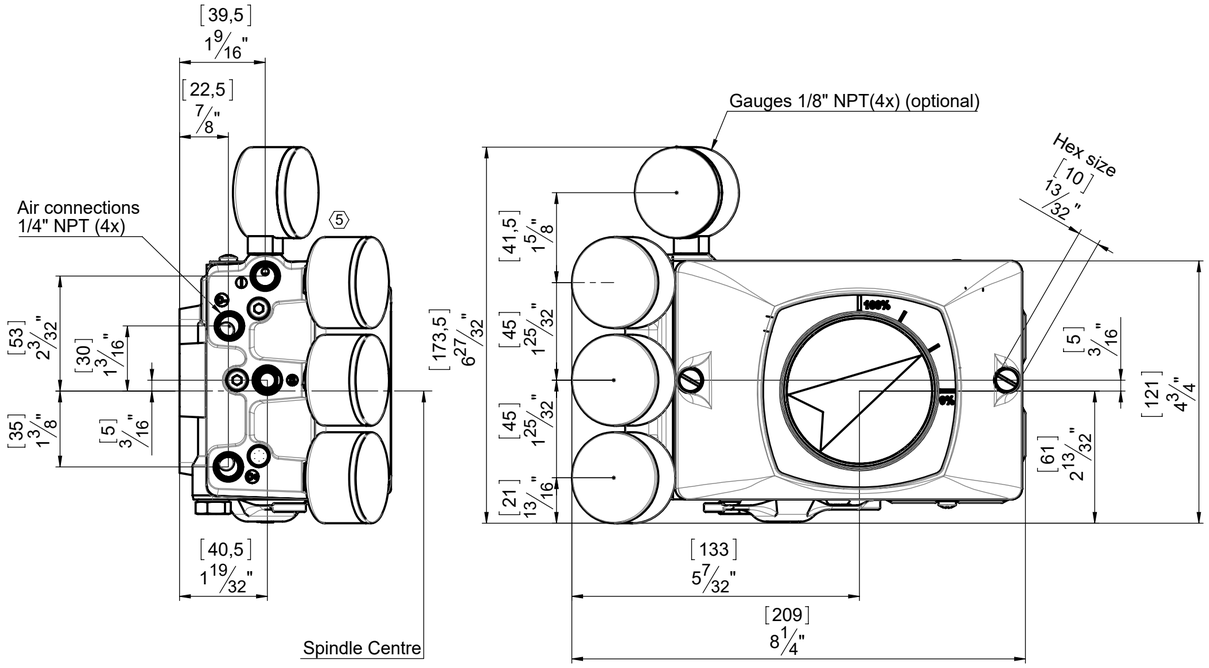


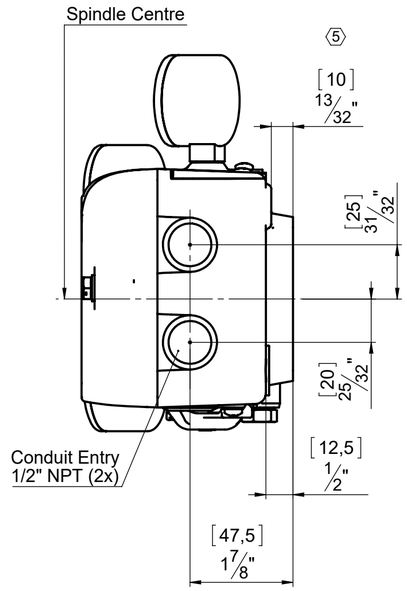


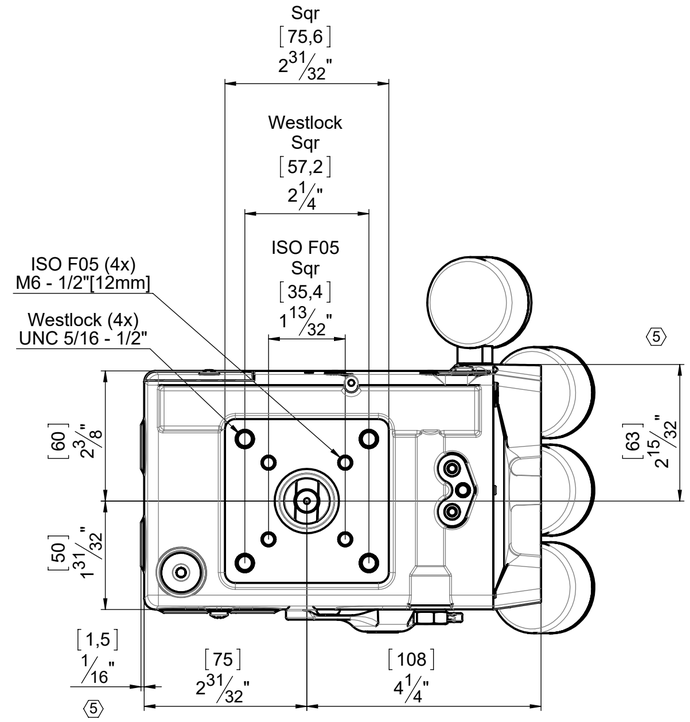


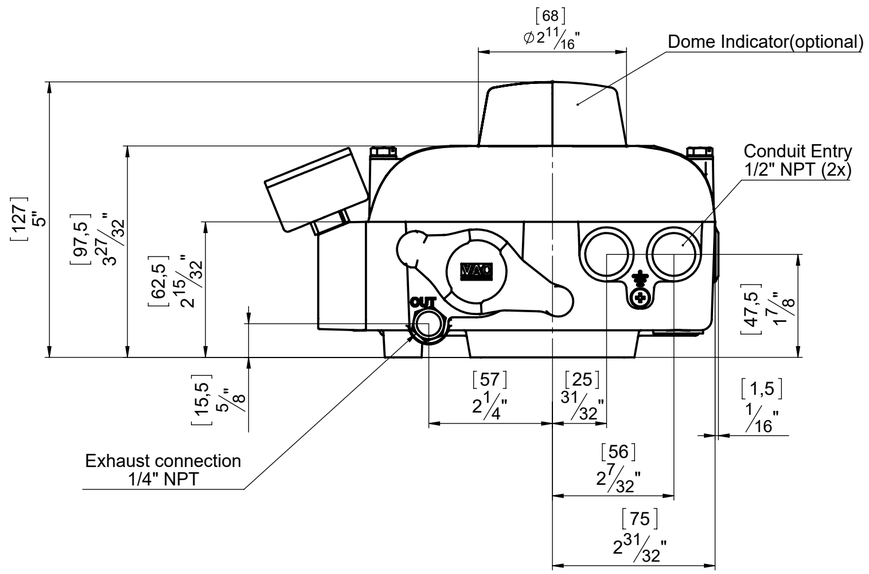


# Dimensional Drawing
# VAC Positioner V200 P and E

| | | |
|---|---|---|
| VAC | File: 91900r5_160421_V200 PP_EP STD_Dim Drawing | |
| | Scale: 1:2 First angle projection. | |
| | Drawn by / date: Lennart Nord / 05 08 03 | Part no: **91900 r5** |
| | This drawing is the property of Valve Accessories & Control Sweden AB , protected in accordance with prevailing law. | Revision date: 16-04-21 |