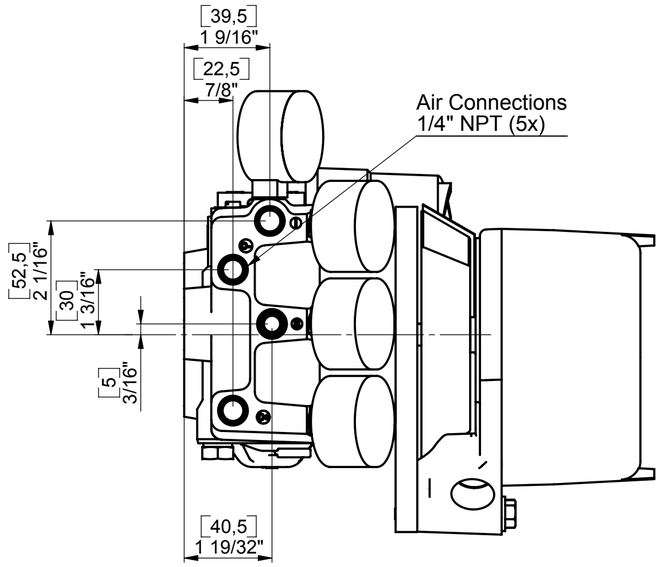

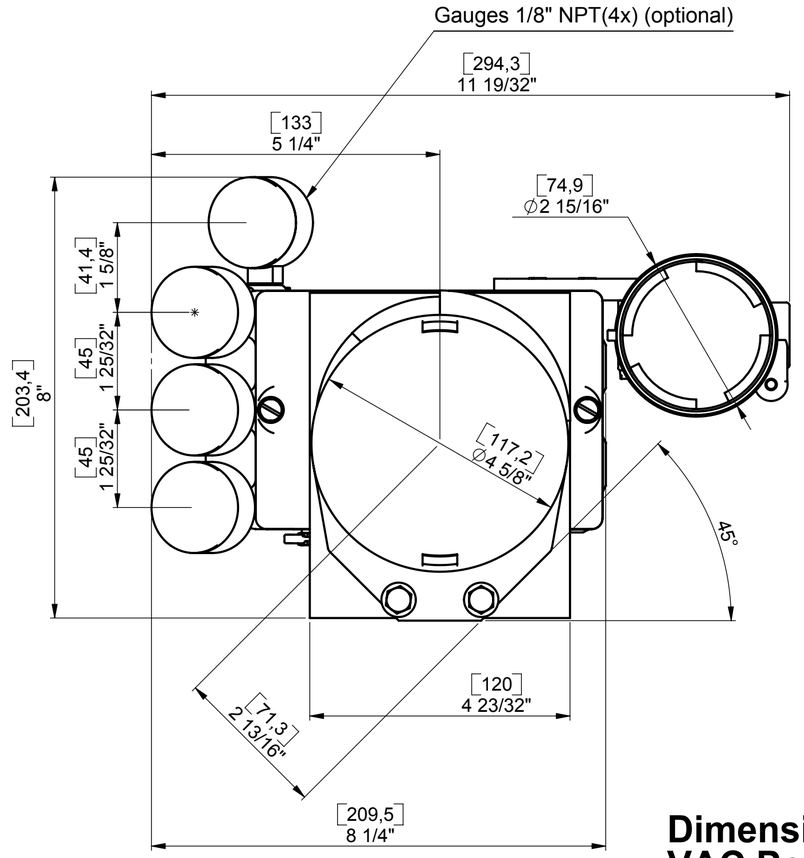

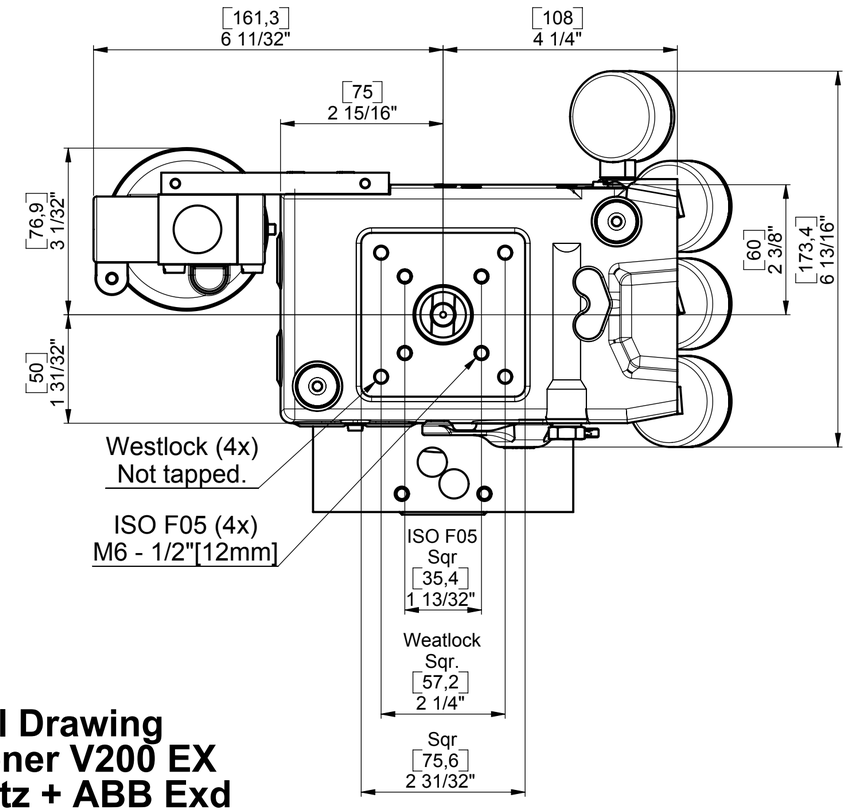

Dimensional Drawing
VAC Positioner V200 EX
Stonel Quartz + ABB Exd

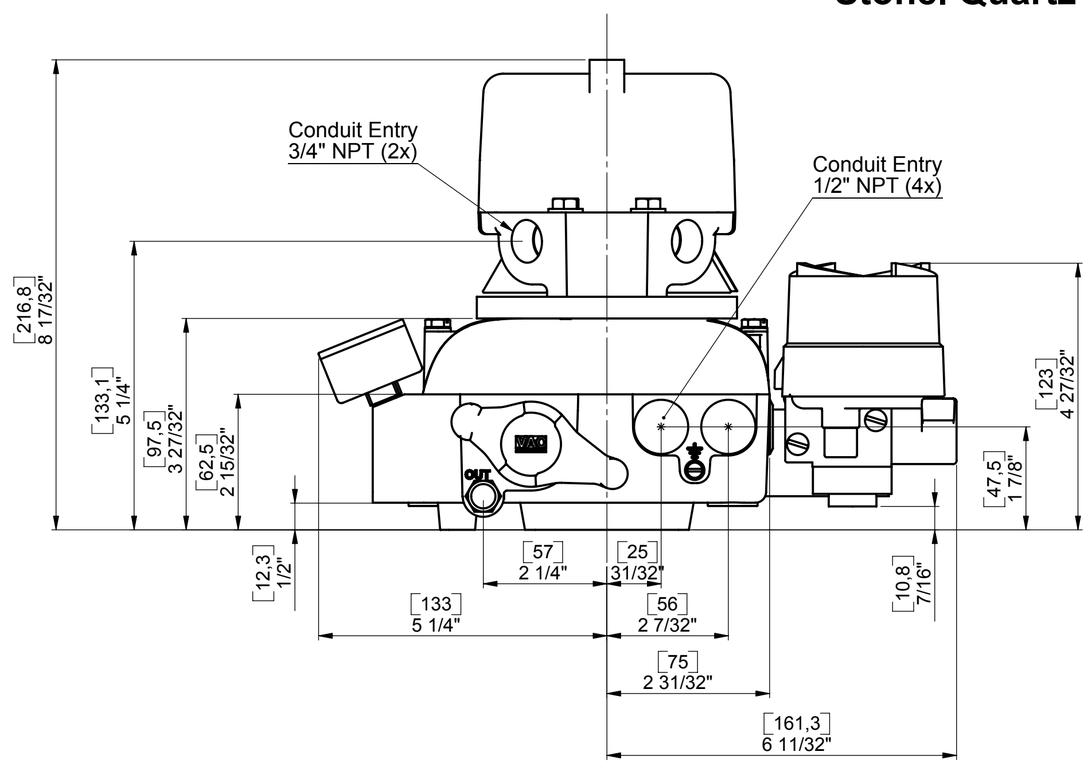

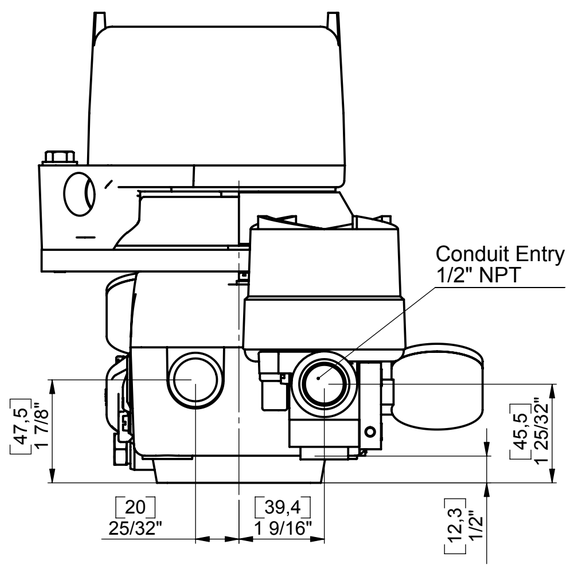

VAC	File: 91913r1_101026_V200 Stonel Quartz w ABB Exd IP_Dim Drawing	
	Scale: 1:2 First angle projection.	Part no: **91913 r1**
	Drawn by / date: Lennart Nord / 09 10 19	
	This drawing is the property of Valve Accessories & Control Sweden AB , protected in accordance with prevailing law.	Revision date: 10 10 26